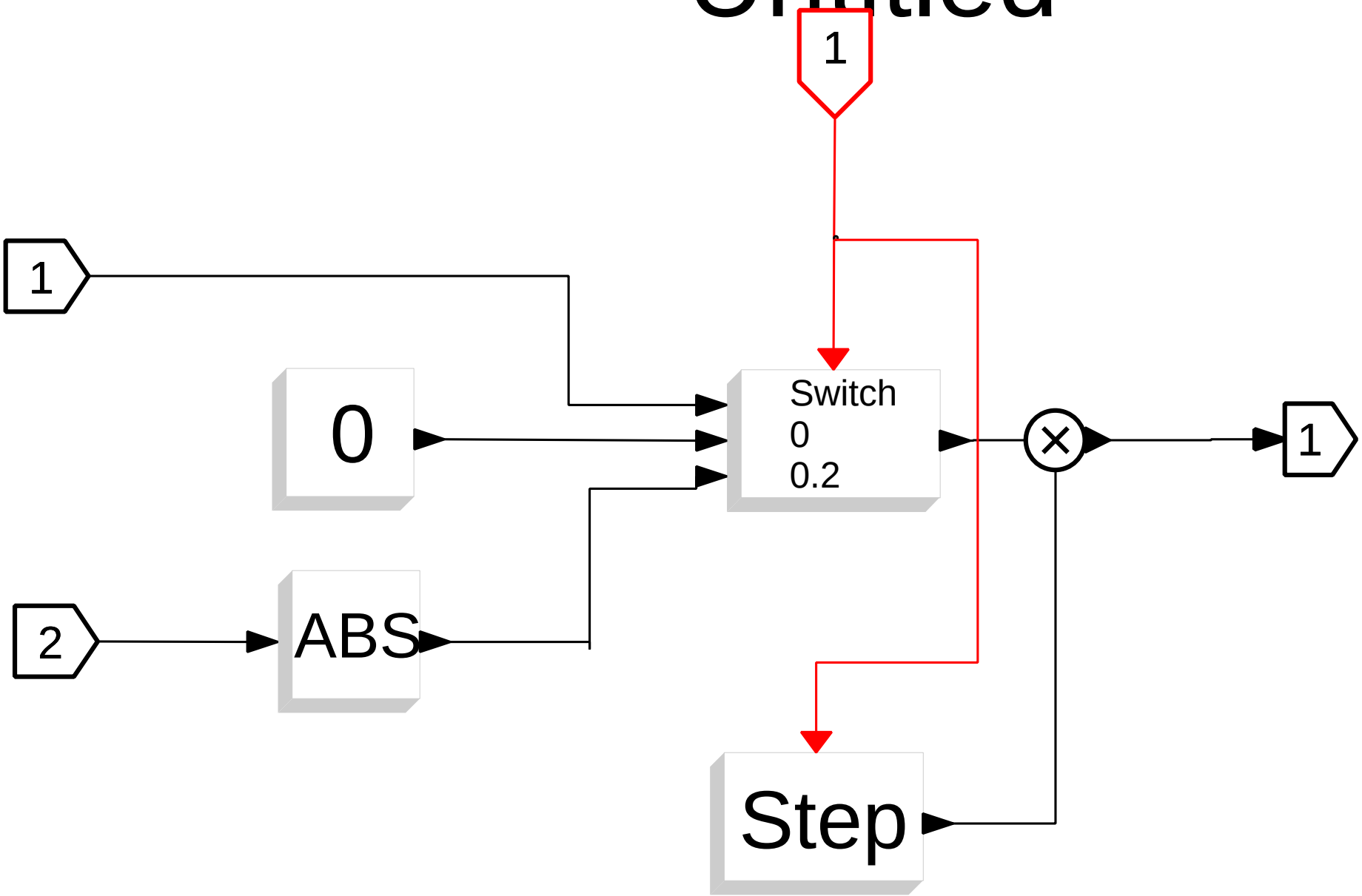Untitled